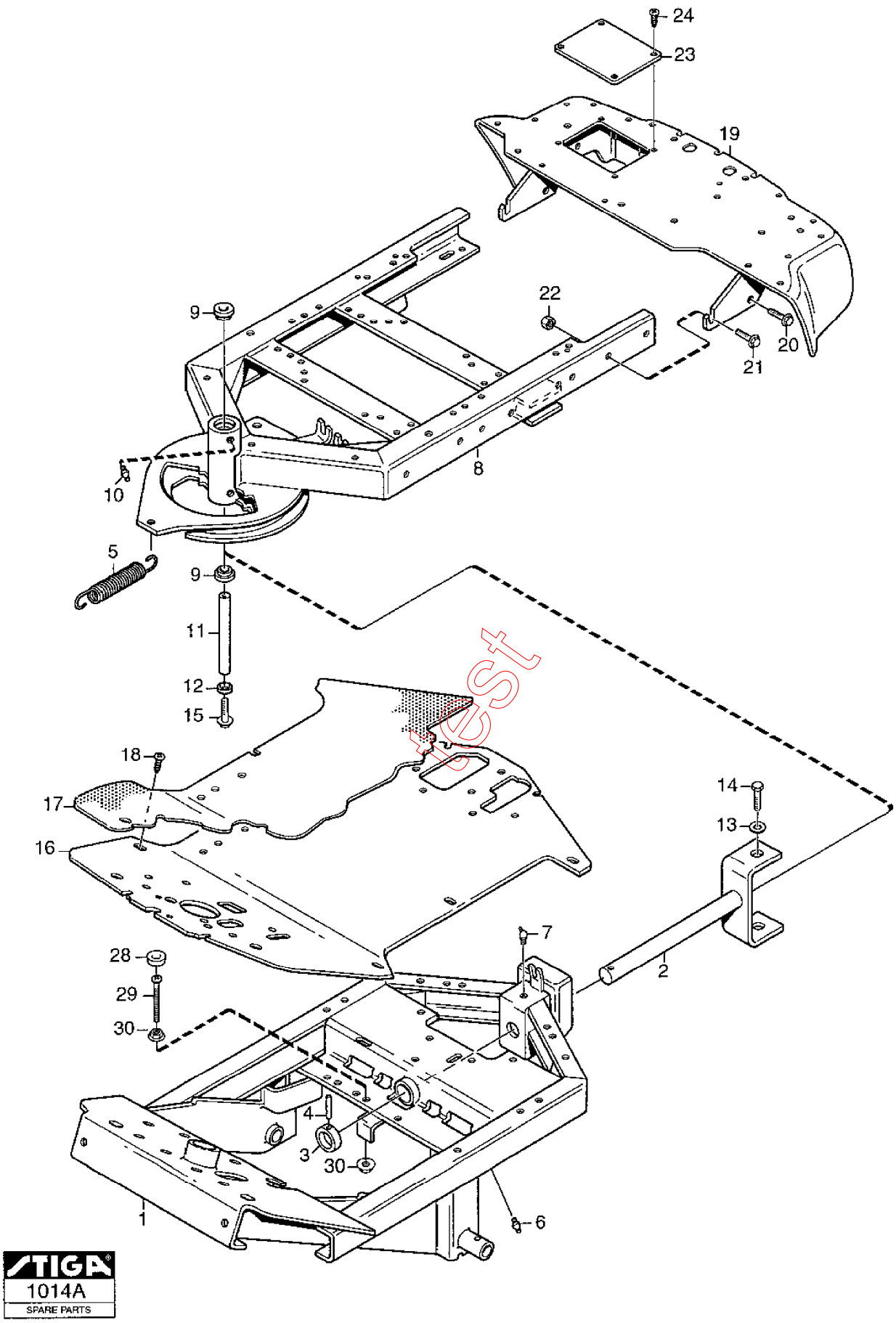
24
23
19
22
9
20
21
8
10
5
9
11
12
15
18
17
16
14
13
7
2
28
29
30
4
3
30
1
6
STIGA
1014A
SPARE PARTS

test

Section: PARK FRAME (Petrol engines)

Pos.	Quantity 6112	6113 6114 6143	6216	6221	Spare part No	Description	Kit	Notes	New
1	1	1	1	1	1134-3919-01	Frame-front			
2	1	1	1	1	1134-3963-02	.Clevis			
3	1	1	1	1	1134-0031-00	.Pivot shaft stop			
4	1	1	1	1	9595-0262-00	.Locating pin			
5	1	1	1	1	1134-2171-01	Spring			
6	1	1	1	1	9501-0500-00	Grease joint			
7	1	1	1	1	9501-0502-00	Grease joint			
8	1	1	1	1	1134-3966-01	Frame-rear			
9	2	2	2	2	9547-0001-00	.Bearing			
10	2	2	2	2	9501-0500-00	Grease joint			
11	1	1	1	1	1134-3968-01	Centre shaft			
12	1	1	1	1	1134-0052-00	Bearing spacer			
13	1	1	1	1	9699-0035-02	Flat washer			
14	1	1	1	1	9959-1020-16	Screw			
15	1	1	1	1	9959-1025-16	Screw			
16	1	1	1	1	1134-3965-01	Floor plate			
17	1				1134-4062-01	Floor mat			
17		1	1	1	1134-4061-01	Floor mat			
18	2	2	2	2	9893-0616-16	Screw			
19	1	1			1134-4833-02	Bumper-black			
19			1	1	1134-4833-01	Bumper-grey			
20	2	2	2	2	9945-0816-16	Screw			
21	2	2	2	2	9959-0820-16	Screw			
22	2	2	2	2	9739-0831-22	Nut			
23	1	1	1	1	1134-4167-01	Cover			
24	4	4	4	4	9840-8009-16	Screw			
28	1	1	1	1	1134-4975-01	Rubber block			
29	1	1	1	1	9950-0570-12	Screw			
30	2	2	2	2	9739-0531-22	Nut			

test