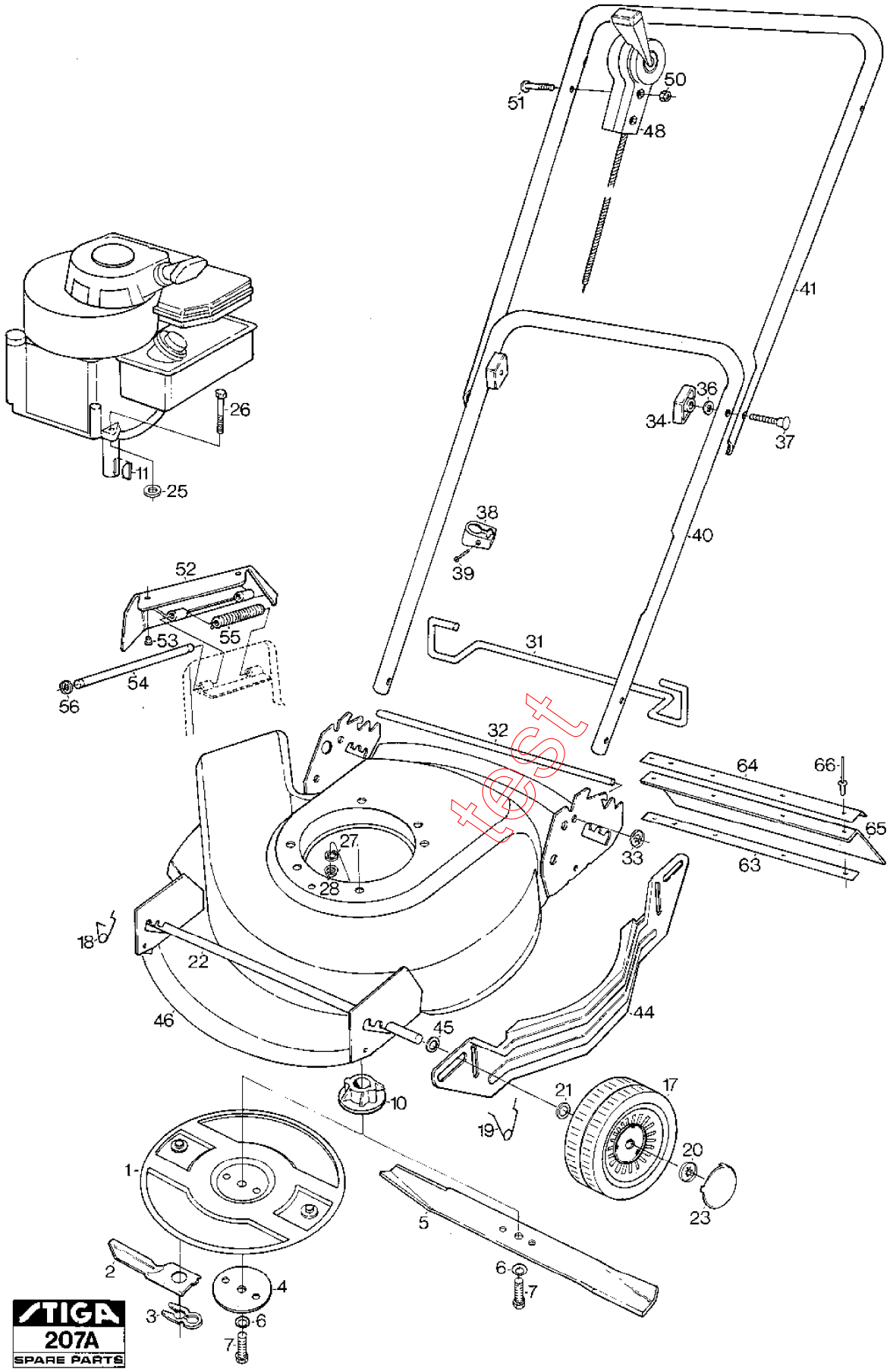
50
51
48
41
26
36
34
37
11
25
38
40
39
52
53
55
31
54
56
32
64
66
65
27
33
63
28
18
22
46
45
44
10
21
17
19
20
23
1
5
2
6
4
7
3
6
7
STIGA
207A
SPARE PARTS

test

Section: DINO ROTOR 18"

Pos.	Quantity 1112	1211	1125 1137	1437	Spare part No	Description	Kit	Notes	New
1		1			1111-9025-02	Blade disc assy			
1	1		1		1111-9025-01	Blade disc assy			
2	1		1		1111-9021-01	.Tornado blades			
2		1			1111-9022-01	.Dino-blade kit			
4	1	1	1		1111-0020-00	.Washer			
5				1	1111-9502-01	Blade			
6	1	1	1	1	9696-0011-01	.Washer			
7	1	1	1	1	9987-5232-16	.Bolt			
10	1	1	1		1111-9023-01	Blade holder			
10				1	1111-9023-02	Blade holder			
11	1	1	1	1	9600-0014-00	.Key			
17	4	4	4	4	1111-2656-01	Wheel			
18	1	1	1	1	1111-9035-01	Height adjust kit			
18	2	2	2	2	1111-1589-02	.Height adj.spring-			
19	2	2	2	2	1111-1589-01	.Height adj.spring-			
20	1	1	1		1111-9042-01	.Wheel lock kit			
20	4	4	4	4	9675-0017-02	..Lock washer			
21	4	4	4	4	9699-0069-02	Flat washer			
22	2	2	2	2	1111-1590-01	Wheel axle			
23	4	4	4	4	1111-1335-01	Hub cap			
25			3		9699-0056-02	Flat washer		1125	
26	3	3	3	3	9997-0830-16	Screw		30 mm	
26			2		9997-0835-12	Screw		1125 - 35 mm	
26			1		9997-0860-16	Screw		1125 - 60 mm	
27	3	3	3	3	9683-0030-02	Lock washer			
28	3	3	3	3	9799-0831-02	Nut			
31	1	1	1	1	1111-3017-01	Handlebar clamp			
32	1	1	1	1	1111-1532-01	Pivot rod			
33	2	2	2	2	9670-0203-00	Lock washer			
34	1	1	1	1	1111-9030-02	Handle bolt kit			
34	2	2	2	2	1111-0035-01	.Locking knob			
36	2	2	2	2	9699-0025-02	.Washer			
37	2	2	2	2	9899-3545-12	.Screw			
38	1	1	1	1	1111-2018-01	Cable holder			
39	1	1	1	1	9836-9216-12	Screw			
40	1	1	1	1	1111-1702-01	Handlebar-lower par			
41	1	1	1	1	1111-2005-01	Handlebar-upper par			
44	1	1	1		1111-1529-01	Side guard			
45	2	2	2	4	1111-1593-01	Washer			
46	1			1	1111-1645-02	Chassis-yellow			
46		1	1		1111-1644-02	Chassis-yellow			
48			1	1	1111-2367-04	Gas control		1137,1437	
48			1		1111-2365-04	Gas control		1125	
48	1	1			1111-2366-01	Gas control			
50	2	2	2	2	9799-0631-02	Nut			
51	2	2	2	2	9948-0645-16	Screw			
52	1			1	1111-1651-01	Ejection shield			
53	2			2	9403-0040-00	Rubber plug			
54	1			1	1111-1648-01	Shaft			
55	1			1	1111-1649-01	Spring			
56			2	2	9652-0005-04	Circlip			
63	1			1	1111-0931-02	Mounting bar			
64	1			1	1111-0932-01	Mounting bar			
65	1			1	1111-0933-02	Rubber guard			
66	4			4	1151-0300-01	Rivet			