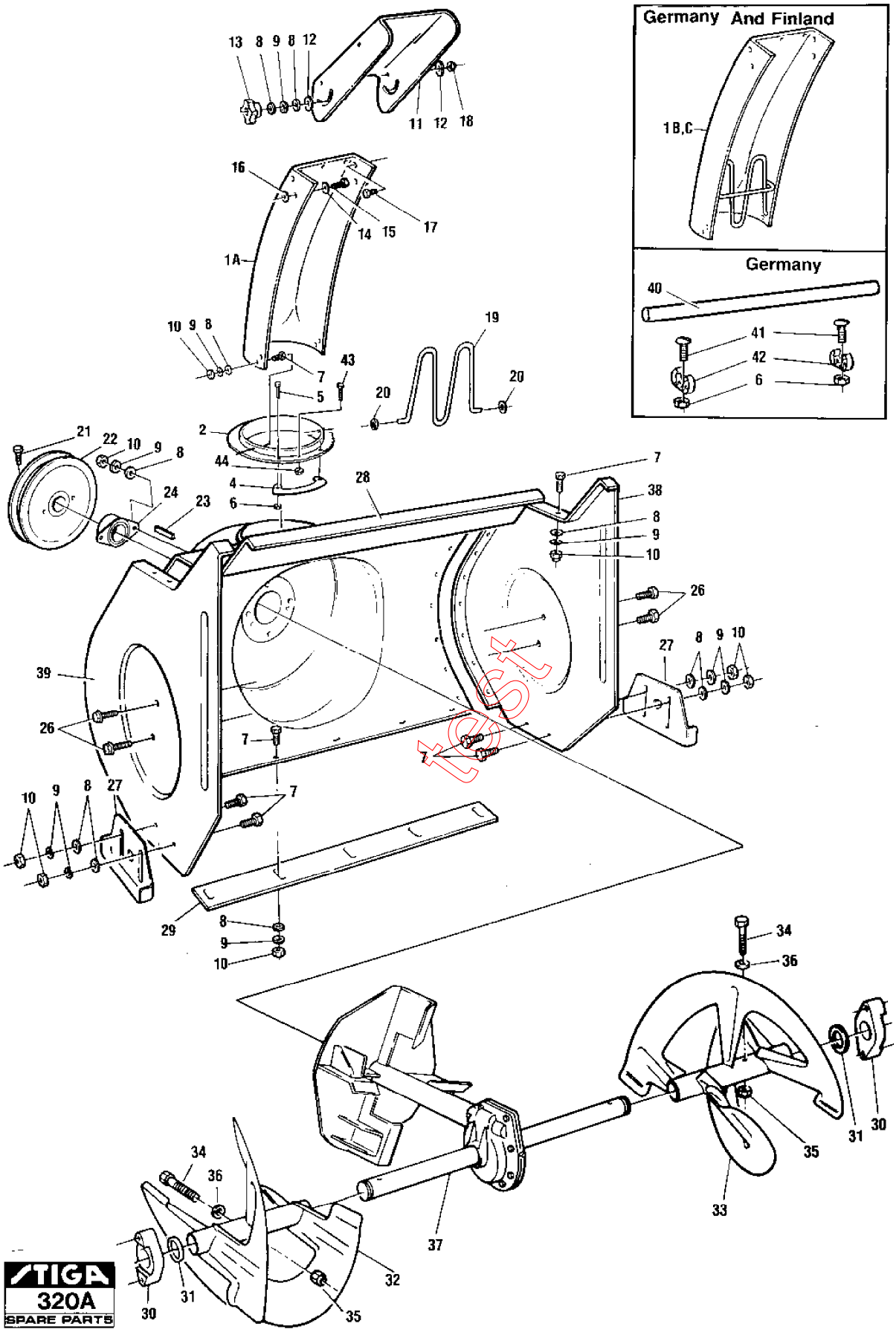
Germany And Finland
1B,C
Germany
40
41
42
6
13 8 9 8 12
11 12 18
16
14 15
17
1A
10 9 8
7
43
5
19
20
20
2
44
4
6
21
22
10
9
8
24
23
28
7
38
8
9
10
26
27
8 9 10
39
26
7
7
10 9 8 27
7
29
8
9
10
34
36
31
30
35
33
37
34
36
32
31
30
35
STIGA
320A
SPARE PARTS

Section: 523, 725T, 825, 825T AUGER ASSY

Pos.	Quantity 1813	1815	1814 1816	Spare part No	Description	Kit	Notes	New
1A	1	1	1	1812-0443-01	Chute			
1B	1	1	1	1812-0633-01	Chute		Tyskland	
1C	1		1	1812-0230-01	Chute extension		Finland	
2	1	1	1	1812-1116-01	Flange			
4	3	3	3	1812-0632-01	Retainer			
5	6	6	6	1812-0388-01	Screw			
6	6	6	6	1812-0389-01	Locking nut			
7	28	28	28	9899-3622-16	Screw			
8	31	31	31	9699-0028-02	Flat washer			
9	31	31	31	9683-0030-02	Lock washer			
10	30	30	30	9795-3631-02	Nut			
11	1	1	1	1812-0662-01	Chute deflector			
12	2	2	2	1812-0667-01	Plastic washer			
13	1	1	1	1811-0344-01	Wing knob			
14	1	1	1	9699-0069-02	Flat washer			
15	1	1	1	1812-0273-01	Screw			
16	1	1	1	9699-0029-02	Flat washer			
17	3	3	3	9988-3619-16	Screw			
18	3	3	3	9743-3621-32	Nut			
19	1	1	1	1812-0231-01	Chute protection			
20	2	2	2	1812-1143-01	Push nut			
21	2	2	2	1812-1119-01	Bolt			
22	1	1	1	1812-0348-01	Pulley		6.5"	
23	1	1	1	1812-0626-01	Key			
24	1	1	1	1812-0883-01	Bearing			
26	4	4	4	1812-0387-01	Screw			
27	2	2	2	1812-0831-01	Height adjustor			
28	1			1812-0866-01	Auger housing			
28		1	1	1812-0867-01	Auger housing			
29	1			1812-0218-01	Scraper bar			
29		1	1	1812-0219-01	Scraper bar			
30	2	2	2	1812-0347-01	Bearing			
31	2	2	2	1812-0397-01	Spacer			
32		1	1	1812-0658-01	Auger-R.H.			
32	1			1812-0819-01	Auger-R.H.			
33		1	1	1812-0657-01	Auger-L.H.			
33	1			1812-0818-01	Auger-L.H.			
34	1	1	1	1812-9005-01	Shear bolt kit			
36	2	2	2	1812-0531-01	.Spacer			
37	1			1812-0537-01	Gear box assy			
37		1	1	1812-0539-01	Gear box assy			
38	1	1	1	1812-0868-01	Side plate-L.H.			
39	1	1	1	1812-0869-01	Side plate-R.H.			
40	1	1	1	1812-0315-01	Clean out stick		Tyskland	
41	2	2	2	1812-0728-01	Bolt			
42	2	2	2	1812-0316-01	Clamp			
43	1	1	1	9988-3525-16	Screw			
44	1	1	1	9743-3521-32	Nut			