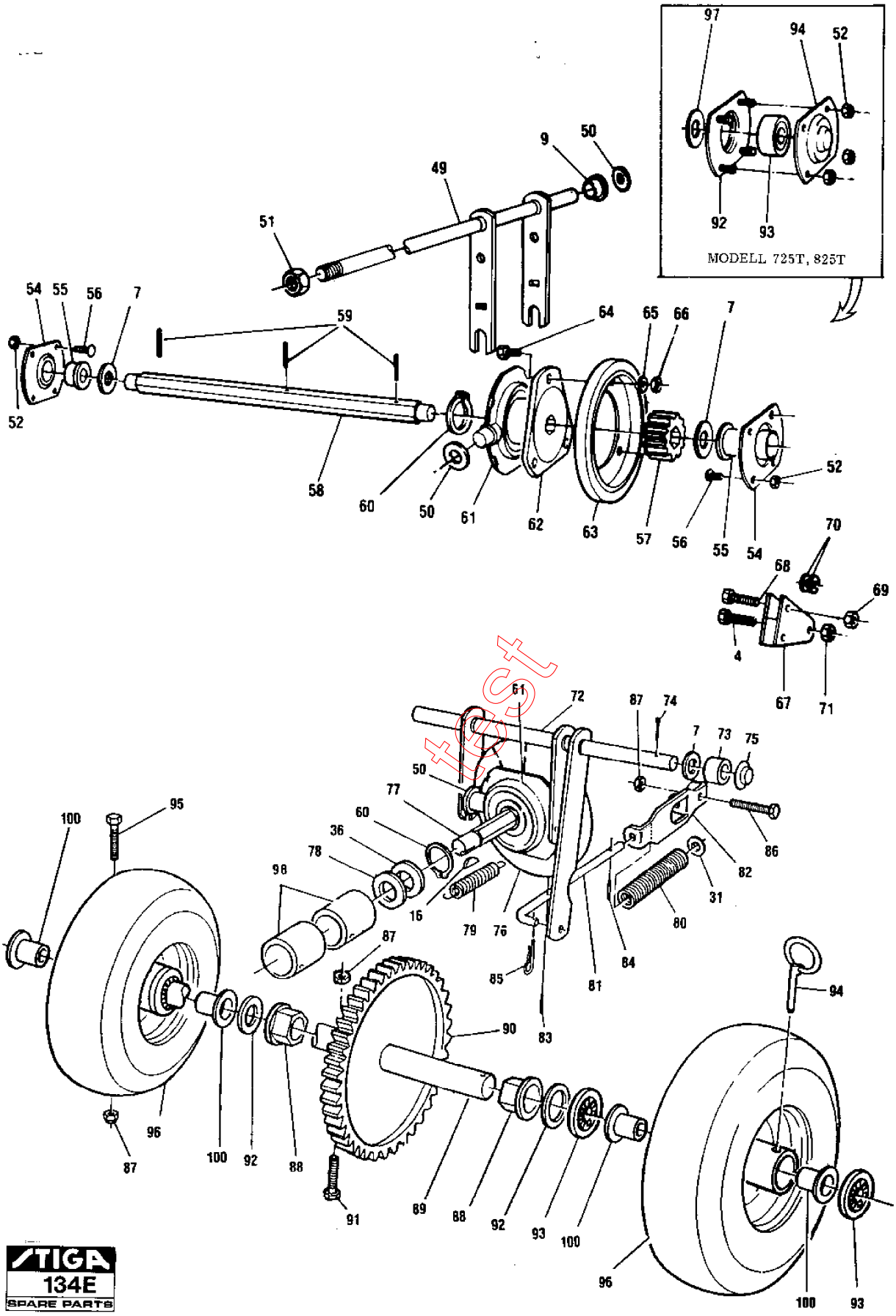
MODELL 725T, 825T
STIGA
134E
SPARE PARTS

Section: 523, 725T, 825, 825T DRIVE TRAIN

Pos.	Quantity 1813	1815	1814 1816	Spare part No	Description	Kit	Notes	New
4	1	1	1	9988-3632-12	Screw			
7	4	4	2	9699-0038-02	Flat washer			
9	1	1	1	1812-0328-01	Bushing			
16	1	1	1	1812-0307-01	Key			
31	1	1	1	9699-0028-02	Flat washer			
36	1	1		1812-0361-01	Washer			
49	1	1	1	1812-0448-01	Shifter fork			
50	3	3	3	9699-0115-02	Washer			
51	1	1	1	9743-3721-32	Nut			
52	8	8	8	1811-0421-01	Nut			
54	2	2	1	1812-0451-01	Bearing housing			
55	2	2	1	1812-0368-01	Bearing			
56	8	8	4	1812-0395-01	Screw			
57	1	1	1	1812-0372-01	Worm gear			
58	1	1	1	1812-0371-01	Shaft			
59	3	3	3	1812-0391-01	Pin			
60	2	2	2	1812-0402-01	Retaining ring			
61	2	2	2	1812-0450-01	Bearing			
62	1	1	1	1812-0370-01	Hub			
63	1	1	1	1812-9002-01	Friction disc			
64	3	3	3	9988-3516-16	Screw			
65	3	3	3	9683-0025-02	Lock washer			
66	3	3	3	9795-3531-02	Nut			
67	1	1	1	1812-0247-01	Bracket			
68	1	1	1	9988-3545-12	Screw			
69	1	1	1	9743-3521-32	Nut			
70	2	2	2	1812-0317-01	Spacer			
71	1	1	1	9743-3621-32	Nut			
72	1	1	1	1812-0449-01	Clutch fork			
73	2	2	2	1812-0363-01	Bushing			
74	2	2	2	9599-0073-02	Split pin			
75	2	2	2	1812-0404-01	Retainer			
76	1	1	1	1812-0362-01	Pulley			
77	1	1	1	1812-0686-01	Traction hex shaft			
78	1	1	1	1812-0709-01	Bearing thrust			
79	1	1	1	1812-0364-01	Spring			
80	1	1	1	1812-0366-01	Spacer			
81	1	1	1	1812-0367-01	Rod			
82	1	1	1	1812-0365-01	Bracket			
83	1	1	1	1812-0406-01	Pin			
84	1	1	1	1812-0405-01	Pin			
85	1	1	1	9599-0054-02	Cotter pin			
86	1	1	1	9988-3532-12	Screw			
87	3	3	2	9743-3521-32	Nut			
88	2	2	2	1812-0373-01	Bearing			
89	1	1	1	1812-0588-01	Shaft			
90	1	1	1	1812-0620-01	Worm gear			
91	1	1	1	9988-3557-12	Screw			
92	2	2		1812-0407-01	Washer			
92			1	1812-0615-01	Bearing holder			
93	2	2		1812-0567-01	Retaining ring			
93			1	1812-0617-01	Ball bearing			
94			1	1812-0616-01	Bearing holder			
94	1	1		1812-0408-01	Clik pin			
95	1	1		9988-3538-12	Screw			
96		2		1812-1126-01	Wheel		13 x 5.00-6	
96	2			1812-1072-01	Wheel		4.10 x 3.50-6	
96A		1		1812-0635-01	Snow chains		Ej ill/not ill.	
96A	1			1812-0634-01	Snow chains		Ej ill/not ill.	
97			2	1812-0822-01	Washer			
98	2	2	2	1812-0710-01	Bearing needle			
100	4	4		1812-1073-01	Bushing			

test