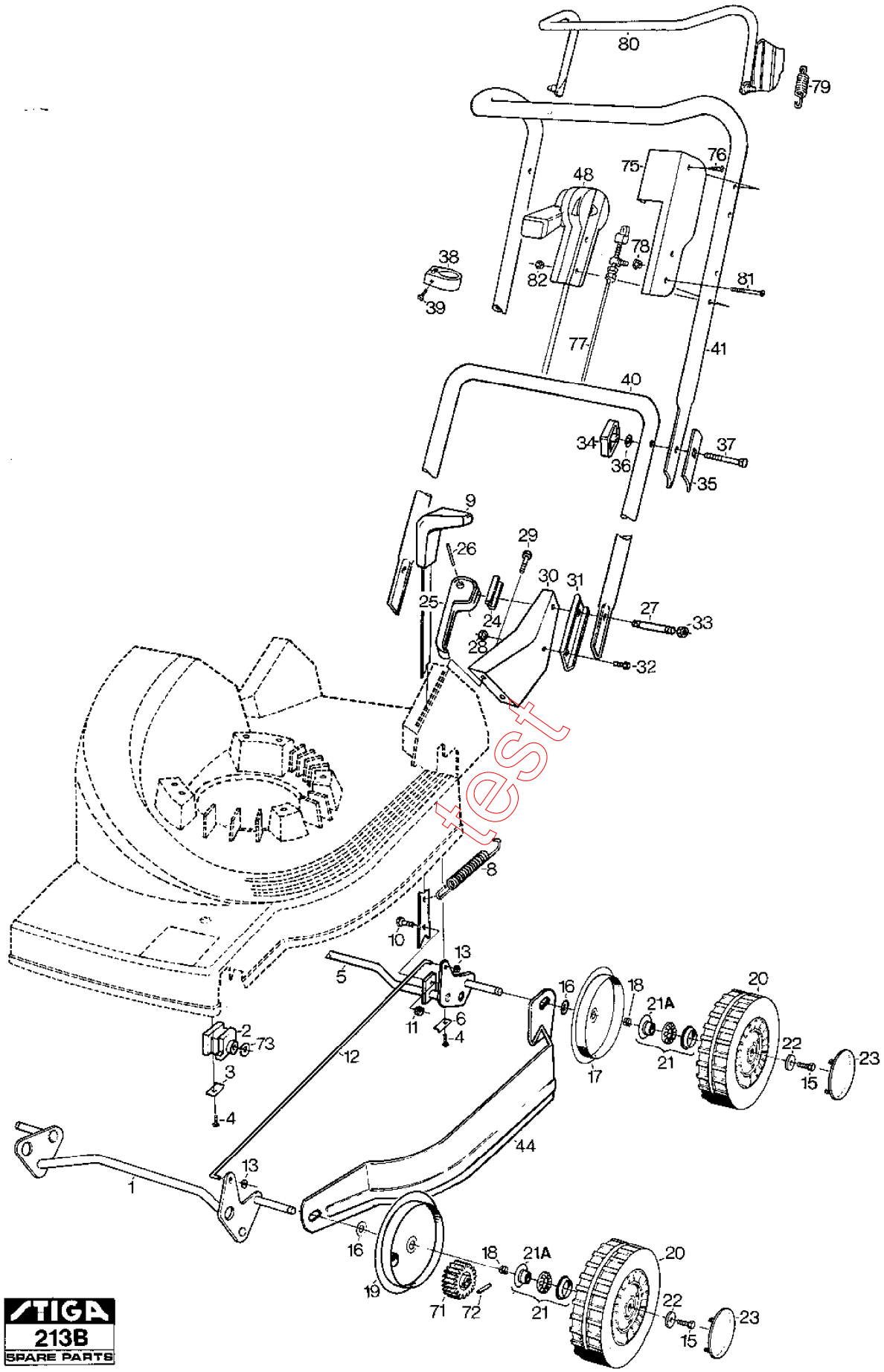

STIGA
213B
SPARE PARTS

test

Section: TURBO 46-460S WHEEL SUSPENSION

Pos.	Quantity 6216	6425	6516 6535	Spare part No	Description	Kit	Notes	New
1	1	1	1	1111-2146-01	Front axle			
2	2	2	2	1111-1067-02	.Bushing			
3	2	2	2	1111-1706-01	Clamp			
4	4	4	4	9943-0510-16	Screw			
5	1	1	1	1111-2148-01	Rear axle			
6	2	2	2	1111-1072-01	Clamp rear			
8	1	1	1	1111-1074-01	Spring-height adjus			
9	1	1	1	1111-1357-02	Lever			
10	1	1	1	9997-0612-16	Screw			
11	1	1	1	9739-0631-22	Nut			
12	1	1	1	1111-1068-01	Tension rod			
13	2	2	2	9675-0008-02	Locking washer			
15	4	4	4	9997-0612-16	Screw			
16		4	4	9699-0037-02	Washer			
17	2	4	2	1111-1180-03	Wheel cover			
18	4	4	4	1111-1138-01	Spring			
19	2		2	1111-1180-04	Wheel cover			
20	4	4	4	1111-2665-01	Wheel assy			
21	1	1	1	1111-9047-01	.Ball bearing kit			
21A	2	2	2	1111-1184-01	..Bearing cone			
22	4	4	4	9699-0100-02	Washer			
23	4	4	4	1111-1181-01	Hub cap			
24	2	2	2	1111-1638-01	Washer			
25	2	2	2	1111-1016-01	Locking handle			
26	2	2	2	9595-0235-00	Locating pin			
27	2	2	2	1111-1087-02	Tensioning rod			
28	2	2	2	9739-0831-22	Nut			
29	4	4	4	9942-0816-16	Screw			
30	2	2	2	1111-1078-01	Handle attachment			
31	2	2	2	1111-1019-01	Adjusting plate			
32	2	2	2	9997-0816-16	Screw			
33	2	2	2	9747-0831-02	Lock nut			
34	2	2	2	1111-0035-01	.Locking knob			
34	1	1	1	1111-9030-02	Handle bolt kit			
35	2	2	2	1111-0178-00	.Reinforcement			
36	2	2	2	9699-0025-02	.Washer			
37	2	2	2	9899-3551-12	.Screw			
38	1	1	1	1111-2018-01	Cable holder			
39	1	1	1	9836-9216-12	Screw			
40	1	1	1	1111-1076-01	Handle-lower part			
41	1	1	1	1111-2003-01	Handlebar			
44	1			1111-1413-01	Side protection-L.H			
44	1			1111-1414-01	Side protection-R.H			
48			1	1111-2367-03	Gas control		6535	
48	1	1	1	1111-2365-02	Gas control		6516	
71	1		1	1111-9055-01	Gear wheel kit			
72	2		2	9594-0009-00	.Locating pin			
73	2		2	1111-1456-01	Washer			
75	1		1	1111-2010-01	Attachment plate			
76	1		1	9849-7909-16	Screw			
77	1		1	1111-1197-02	Clutch cable			
78	1		1	9739-0631-22	Nut			
79	1		1	1482-0160-01	Spring			
80	1		1	1111-1998-01	Control handle			
81	2	2	2	9948-0645-16	Screw			
82	2	2	2	9747-0631-02	Lock nut			