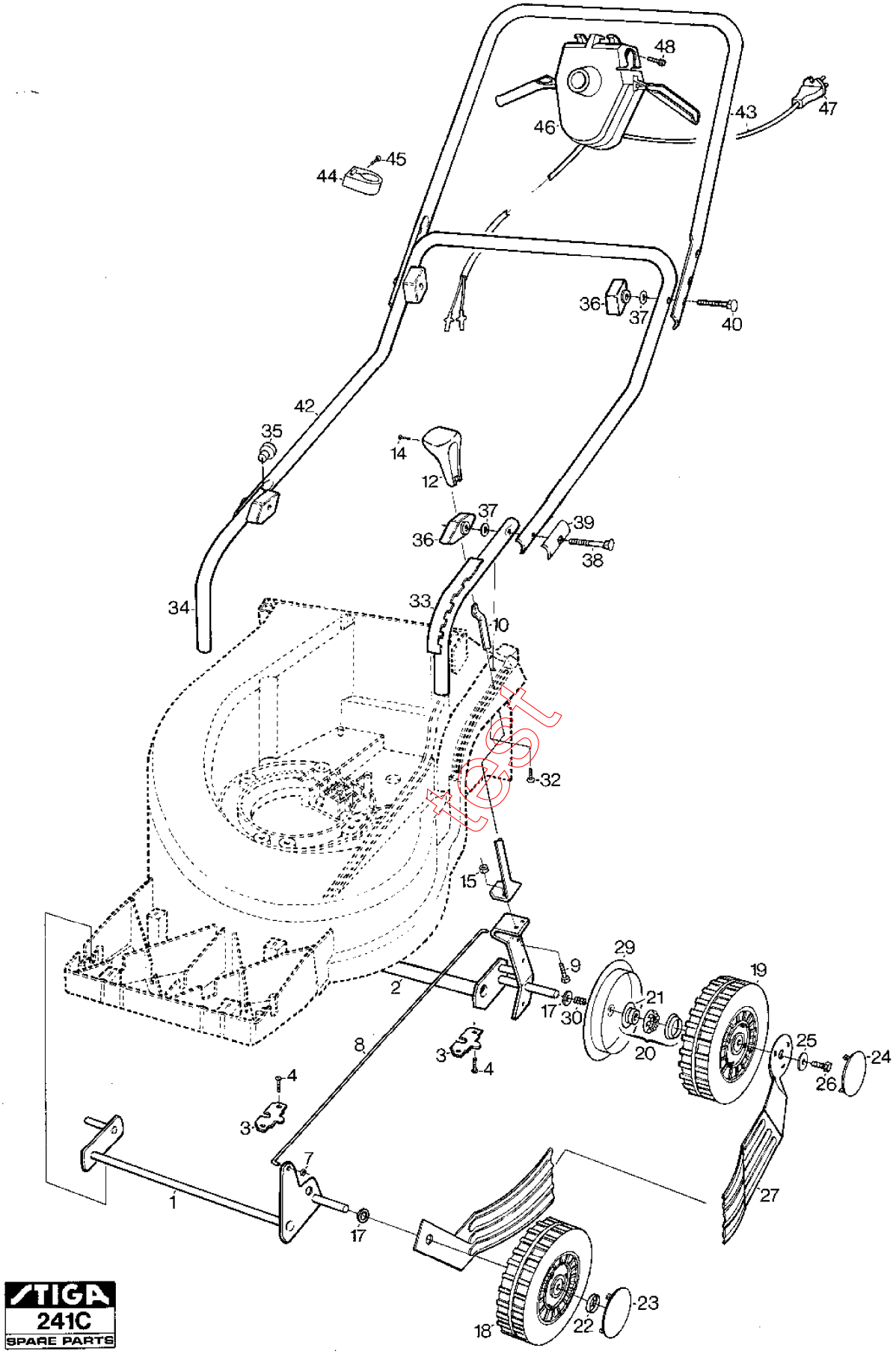
48
46
43
47
44
45
36
37
40
42
35
14
12
37
36
39
38
34
33
10
32
15
9
29
2
17
30
21
19
8
3
4
20
25
24
26
4
3
7
1
17
27
18
22
23
STIGA
241C
SPARE PARTS

Section: TURBO 42 EL WHEEL SUSPENSION

Pos.	Quantity 2772	2773	2872 2877	Spare part No	Description	Kit	Notes	New
1	1	1	1	1111-1785-01	Front axle			
2	1	1	1	1111-2222-01	Rear axle			
3	4	4	4	1111-1820-01	Clamp			
4	8	8	8	9836-9516-12	Screw			
7	2	2	2	9675-0008-02	Locking washer			
8	1	1	1	1111-1068-04	Rod			
9	2	2	2	9997-0512-16	Screw			
10	1	1	1	1111-1811-01	Lever			
12	1	1	1	1111-1812-01	Handle knob			
14	1	1	1	9836-9512-12	Screw			
15	2	2	2	9747-0531-02	Nut			
17	2	2	6	9699-0069-02	Flat washer			
18	2	2	2	1111-2656-01	Wheel			
19	2	2	2	1111-2665-01	Wheel assy			
20	1	1	1	1111-9047-01	.Ball bearing kit			
21	2	2	2	1111-1184-01	..Bearing cone			
22	1	1		1111-9042-01	Wheel lock kit			
22	2	2	2	9675-0017-02	.Lock washer			
23	4	4	2	1111-1335-01	Hub cap			
24			2	1111-1181-01	Hub cap			
25	2	2	2	9699-0100-02	Washer			
26	2	2	2	9997-0612-16	Screw			
27	1	1		1111-1807-01	Side protection-R.H			
27	1	1		1111-1806-01	Side protection-L.H			
29	2	2	2	1111-1180-03	Wheel cover			
30	2	2	2	1111-1138-01	Spring			
32	2	2	2	9840-7916-16	Screw			
33	1	1	1	1111-1976-01	Steering tube-lower			
34	1	1	1	1111-1798-01	Handle-lower part,			
35	1	1	1	9403-0043-70	Plug			
36	2	2	2	1111-0035-01	.Locking knob			
36	2	2	2	1111-9030-02	Handle bolt kit			
37	2	2	2	9699-0025-02	.Washer			
38	2	2	2	9899-3551-12	.Screw			
39	2	2	2	1111-0178-00	.Reinforcement			
40	2	2	2	9899-3545-12	Screw			
42	1	1	1	1111-1878-01	Handle-mid part			
43	1	1	1	1111-1880-01	Handle-upper part			
44	2	2	2	1111-2018-01	Cable holder			
45	2	2	2	9836-9216-12	Screw			
46	1	1	1	9400-0213-00	Operating device			
46			1	9400-0213-03	Operating device		2877	
47		1		1111-0821-01	Connection cable			
48	2	2	2	9849-7819-16	Screw			

Obsolete