WALBRO

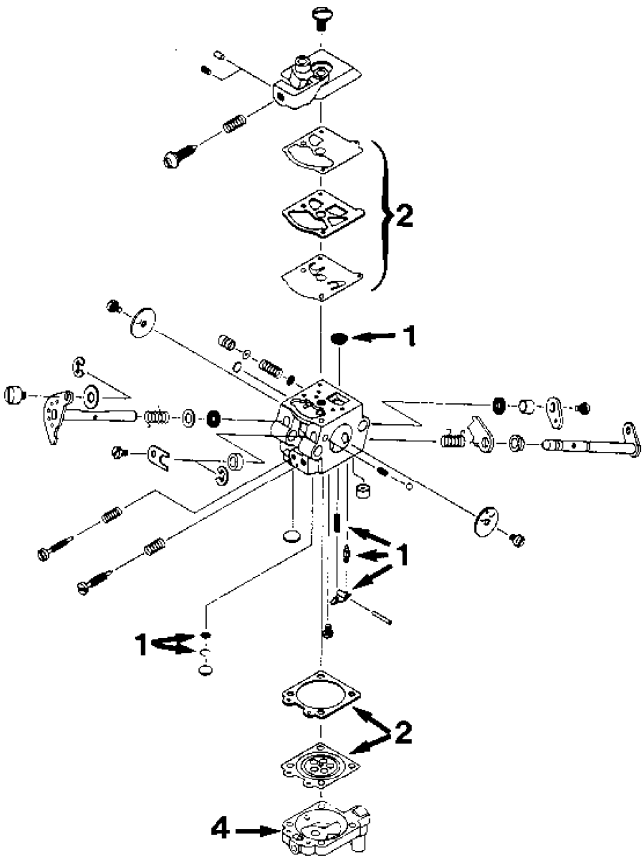

ZAMA

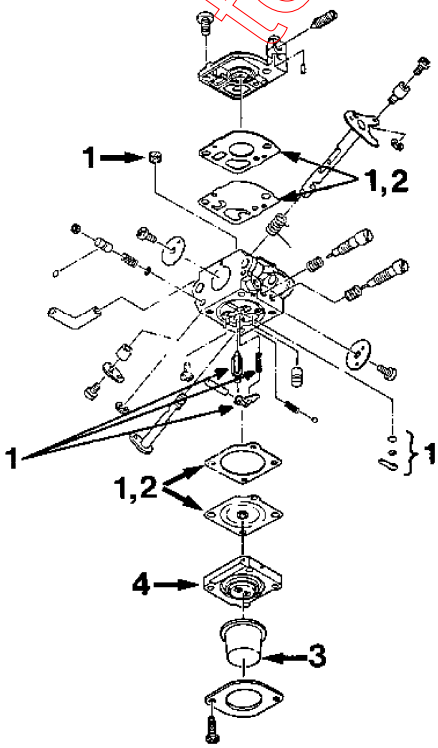

test

Section: 6000-7000-8000 PETROL TRIMMER CARBURETTOR

Pos.	Quantity WALBRO	Quantity ZAMA	Spare part No	Description	Kit	Notes	New
0	1		1921-0152-01	Carburettor assy		Walbro	
1	1		1921-0149-01	Repair kit			
2	1		1921-0108-01	Gasket/diaphragm ki			
3	1		1921-0136-01	Primer bulb			
4	1		1921-0135-01	Primer base			
A00		1	1921-0153-01	Carburettor assy		Zama	
A01		1	1921-0109-01	Repair kit			
A02		1	1921-0134-01	Gasket/diaphragm ki			
A03		1	1921-0133-01	Primer bulb			
A04		1	1921-0155-01	Primer base plastic			

test