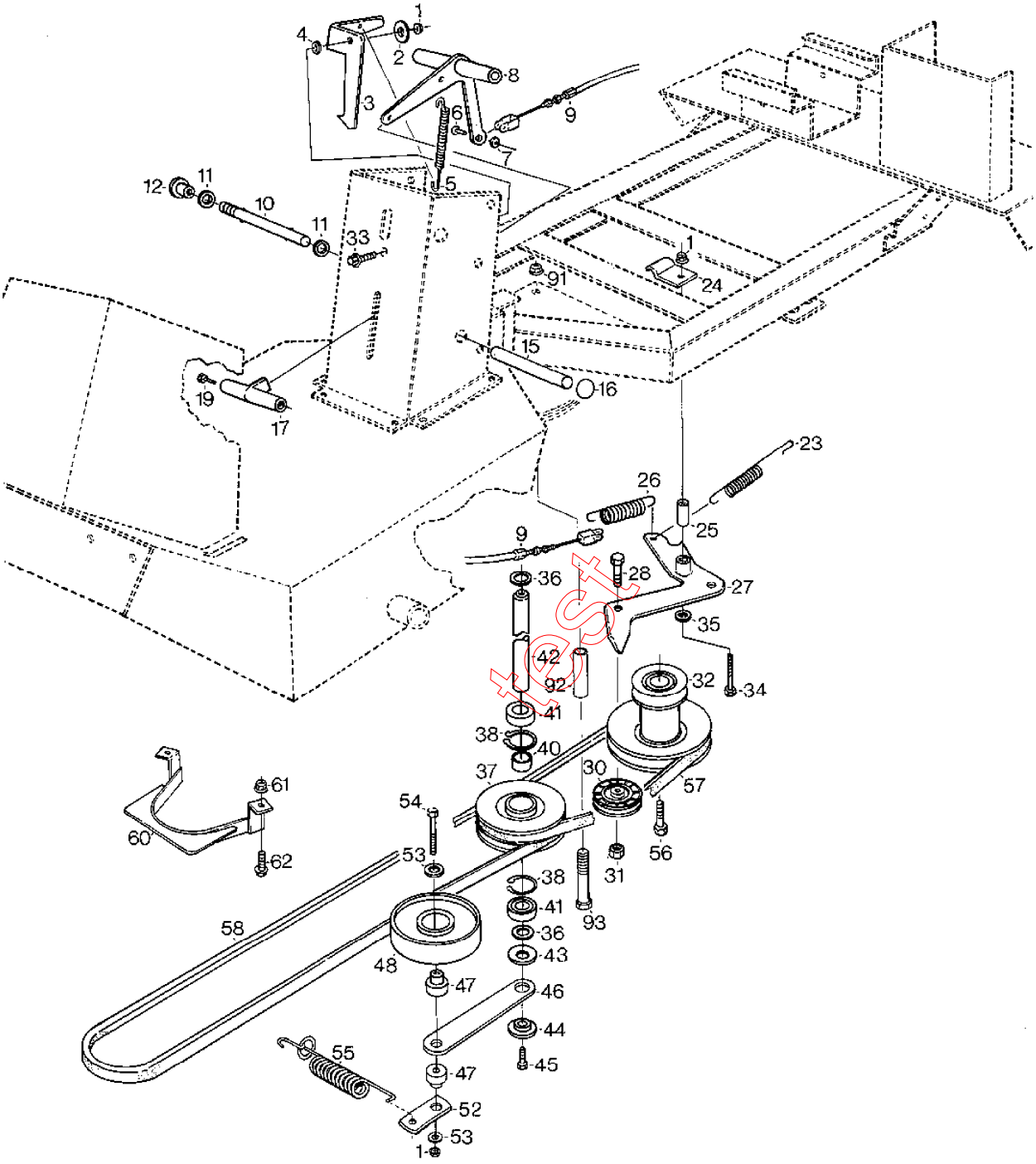


STIGA
162H
SPARE PARTS

# Section: PARK POWER TAKE-OFF

| Pos. | Quantity 1118 | 1258 | 1358 1458 | Spare part No | Description | Kit | Notes | New |
|---|---|---|---|---|---|---|---|---|
| 1 | 3 | 3 | 3 | 9739-0831-22 | Nut | | | |
| 2 | 1 | 1 | 1 | 1134-0143-00 | Stop washer | | | |
| 3 | 1 | 1 | 1 | 1134-2463-01 | Plug | | | |
| 4 | 1 | 1 | 1 | 9695-0002-00 | Washer | | | |
| 5 | 1 | 1 | 1 | 1131-1497-01 | Spring | | | |
| 6 | 1 | 1 | 1 | 9646-0036-22 | Rivet | | | |
| 7 | 1 | 1 | 1 | 9675-0008-02 | Locking washer | | | |
| 8 | 1 | 1 | 1 | 1134-0027-01 | Control lever | | | |
| 9 | 1 | 1 | 1 | 1134-3573-01 | Pto cable | | | |
| 10 | 1 | 1 | 1 | 1134-1972-01 | Disengaging lever | | | |
| 11 | 2 | 2 | 2 | 9699-0025-02 | Washer | | | |
| 12 | 1 | 1 | 1 | 1134-0583-00 | Plastic knob | | | |
| 15 | 1 | 1 | 1 | 1134-0022-00 | Control rod | | | |
| 16 | 2 | 2 | 2 | 9672-0004-02 | Lock washer | | | |
| 17 | 1 | 1 | 1 | 1134-0153-00 | Handle | | | |
| 19 | 1 | 1 | 1 | 9847-8016-16 | Screw | | | |
| 23 | 1 | 1 | 1 | 4231-0013-00 | Spring | | | |
| 24 | 1 | 1 | 1 | 1134-2021-01 | Clamp | | | |
| 25 | 1 | 1 | 1 | 1134-1565-01 | Spacer | | | |
| 26 | 1 | 1 | 1 | 1134-1242-02 | Spring | | | |
| 27 | 1 | 1 | 1 | 1134-2018-01 | Tensioning arm | | | |
| 28 | 1 | 1 | 1 | 9997-1030-16 | Screw | | | |
| 30 | 1 | 1 | 1 | 1134-9027-01 | Tension roller | | | |
| 31 | 1 | 1 | 1 | 9799-1031-02 | Nut | | | |
| 32 | | | 1 | 1134-2717-01 | Engine pulley | | | |
| 32 | 1 | 1 | | 1134-2020-01 | Engine pulley | | | |
| 32 | 1 | 1 | 1 | 9997-1450-16 | Puller-belt pulley | | Tillbehör/Accessory | |
| 33 | 1 | 1 | 1 | 9959-0820-16 | Screw | | | |
| 34 | 1 | 1 | 1 | 9997-0850-16 | Screw | | | |
| 35 | 1 | 1 | 1 | 9699-0056-02 | Flat washer | | | |
| 36 | 2 | 2 | 2 | 1134-0052-00 | Bearing spacer | | | |
| 37 | 1 | 1 | 1 | 1134-1769-02 | Belt pulley assy | | | |
| 38 | 2 | 2 | 2 | 9651-0040-04 | .Retaining ring | | | |
| 40 | 1 | 1 | 1 | 1134-0051-09 | .Spacer | | | |
| 41 | 2 | 2 | 2 | 9549-0019-00 | .Ball bearing | | | |
| 42 | 1 | 1 | 1 | 1134-0057-00 | Centre shaft | | | |
| 43 | 1 | 1 | 1 | 9699-0109-02 | Flat washer | | | |
| 44 | 1 | 1 | 1 | 1134-0222-00 | Washer | | | |
| 45 | 1 | 1 | 1 | 9959-1025-16 | Screw | | | |
| 46 | 1 | 1 | 1 | 1134-1730-01 | Tension wheel arm | | | |
| 47 | 2 | 2 | 2 | 1134-1888-01 | Spacer | | | |
| 48 | 1 | 1 | 1 | 1134-1770-01 | Tension roller | | | |
| 52 | 1 | 1 | 1 | 1134-1893-01 | Spring attachment | | | |
| 53 | 2 | 2 | 2 | 9699-0062-02 | Flat washer | | | |
| 54 | 1 | 1 | 1 | 9997-0865-12 | Screw | | | |
| 55 | 1 | 1 | 1 | 1134-1322-01 | Spring | | | |
| 56 | 1 | 1 | 1 | 9987-5338-12 | Screw | | | |
| 57 | 1 | 1 | 1 | 1134-9012-01 | V-belt | | =9585-0056-00 | |
| 60 | | 1 | 1 | 1134-3654-01 | Finger guard | | | |
| 61 | | 2 | 2 | 9739-0631-22 | Nut | | | |
| 62 | | 2 | 2 | 9997-0616-16 | Screw | | | |
| 91 | 1 | 1 | 1 | 9739-1031-22 | Nut | | | |
| 92 | 1 | 1 | 1 | 1134-0041-03 | Collar | | | |
| 93 | 1 | 1 | 1 | 9997-1070-12 | Screw | | | |