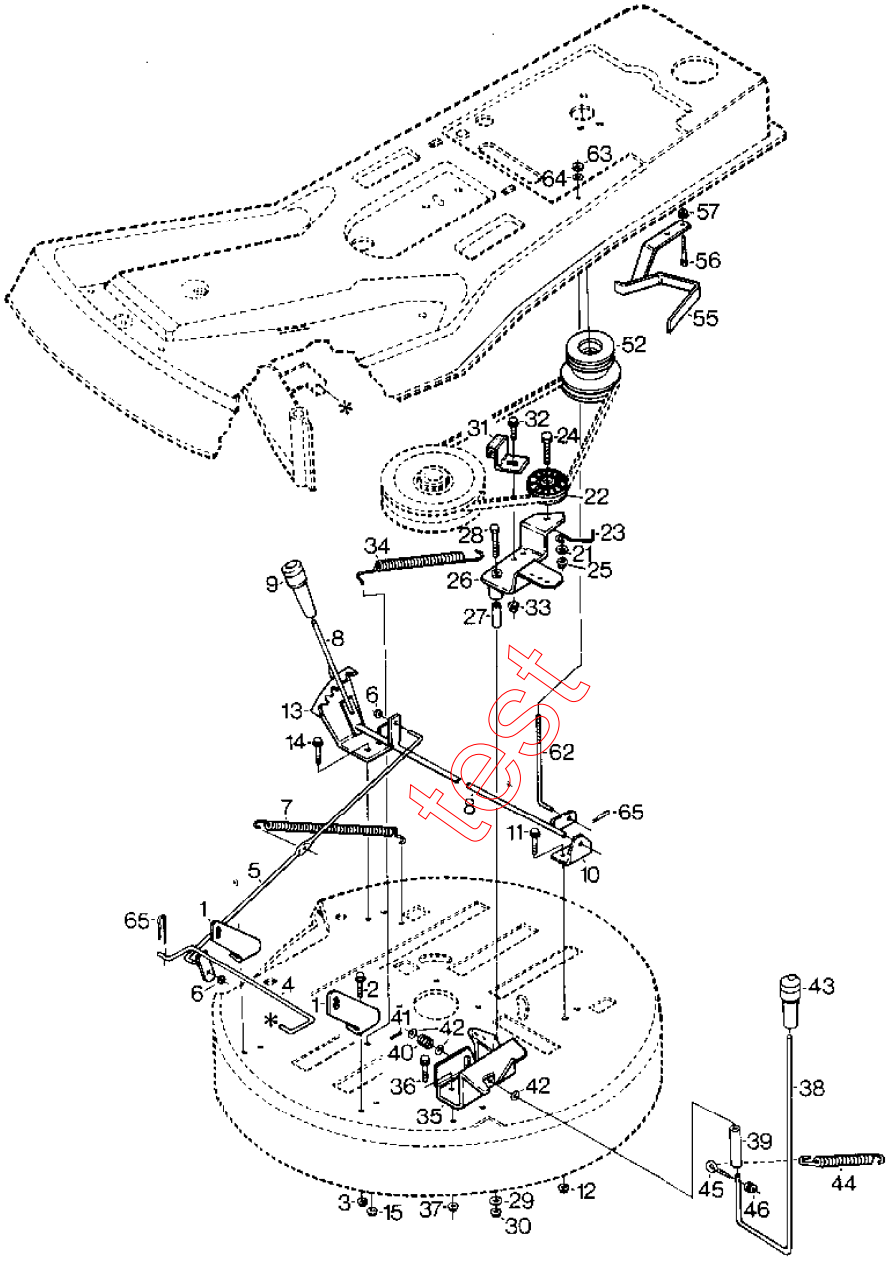

STIGA
719B
SPARE PARTS

Section: SCOOP - GARDEN MOWER DECK CONTROLS

Pos.	Quantity 2021	2022	2023 2328 2333	Spare part No	Description	Kit	Notes	New
1	2	2	2	1134-3187-01	Angle bracket			
2	4	4	4	9959-0816-16	Screw			
3	4	4	4	9739-0831-22	Nut			
4	1	1	1	1134-3189-01	Lift shaft			
5	1	1	1	1134-3131-01	Lift rod			
6	2	2	2	9675-0015-02	Lock washer			
7	1	1	1	1111-1842-01	Spring			
8	1	1	1	1134-3129-01	Lift lever			
9	1	1	1	1134-3193-01	Lever handle			
10	1	1	1	1134-3127-01	Angle bracket			
11	2	2	2	9959-0816-16	Screw			
12	2	2	2	9739-0831-22	Nut			
13	1	1	1	1134-3128-01	Height adj.quadrant			
14	2	2	2	9959-0816-16	Screw			
15	2	2	2	9739-0831-22	Nut			
21	1	1	1	9699-0062-02	Flat washer			
22	1	1	1	1134-9027-01	Tension roller			
23	1	1	1	1134-1795-02	Belt guide			
24	1	1	1	9924-0840-19	Screw			
25	1	1	1	9739-0831-22	Nut			
26	1	1	1	1134-3676-01	Tension arm			
27	1	1	1	1134-1565-01	Spacer			
28	1	1	1	9997-0845-12	Screw			
29	1	1	1	9699-0090-02	Flat washer			
30	1	1	1	9739-0831-22	Nut			
31	1	1	1	1134-1999-01	Brake pad			
32	1	1	1	9959-0816-16	Screw			
33	1	1	1	9739-0831-22	Nut			
34	1	1	1	1134-3211-01	Spring			
35	1	1	1	1134-3560-01	Lever bracket			
36	2	2	2	9959-0816-16	Screw			
37	2	2	2	9739-0831-22	Nut			
38	1	1	1	1134-3207-01	Engaging lever			
39	1	1	1	1134-2849-03	Rubber hose			
40	1	1	1	1134-3213-01	Compression spring			
41	1	1	1	9595-0209-00	Locating pin			
42	3	3	3	1111-1456-01	Washer			
43	1	1	1	1134-3193-01	Lever handle			
44	1	1		1134-3212-01	Spring			
44			1	1134-3648-01	Spring			
45	1	1	1	1134-1889-01	Eyebolt			
46	1	1	1	9747-0631-02	Lock nut			
52	1	1	1	1134-3651-01	Engine pulley			
55	1	1	1	1134-3172-02	Belt guide			
56	2	2	2	9997-0855-12	Screw			
57	2	2	2	9739-0831-22	Nut			
62	2	2	2	1134-3133-01	Angle bracket			
63	2	2	2	9747-0831-02	Lock nut			
64	2	2	2	9699-0090-02	Flat washer			
65	3	3	3	9598-0002-02	Pin lock			

Test